Jeepbot: Mount Documentation

Keenai Braun

Table of Contents

1 MOUNTS 3

1.1 OVERVIEW 3
1.2 FRONT CAMERA MOUNT 8
1.3 REAR CAMERA MOUNTS 16
1.3.1 BAR MOUNT - VARIATION 1 16
1.3.2 RIDGE MOUNT - VARIATION 2 22
1.4 LIDAR MOUNT 24
1.5 ENCODER MOUNT 29

Table of Figures

Figure 1: CAD Assembly of Front Camera Mount 3
Figure 2: CAD Assembly of Rear Camera Mount (Bar Mount - Variation 1) 4
Figure 3: CAD Assembly of Rear Camera Mount (Ridge Mount - Variation 2) 5
Figure 4: CAD of LiDAR Mount 6
Figure 5: CAD of Encoder Mount 7
Figure 6: Front Camera Mount 8
Figure 7: Front Camera Cap 9
Figure 8: Dual Mount – Camera and PDB 10
Figure 9: Rear Camera Mount 16
Figure 10: Trunk Bar 17
Figure 11: Trunk Bar Support 18
Figure 12: Ridge Mount 22
Figure 13: LiDAR Mount 24
Figure 14: Encoder Mount 29

Revision History

Author	Revision	Comment
Keenai Braun Brent Brewster	15th March, 2026 18th March, 2026	External Mounts Internal Mount
Keenai Braun	18th March, 2026	Final submission

1 Mounts

There are a total of three external mounts on the Jeepbot – front camera, rear camera, and LiDAR – and one internal mount – encoder. The rear camera has two mounting variations: bar mount and ridge mount. In this section, you will find an overview of the five mount assemblies with the individual components that make up each one. Next, you will see the individual components per mount configuration along with the additional parts needed for each one during installation. Finally, you will see a sequence of installation steps and photos to help guide you with your installation process. {**Note**: All external mounts are made of ASA filament, and the internal mount is made of ABS filament}

1.1 Overview

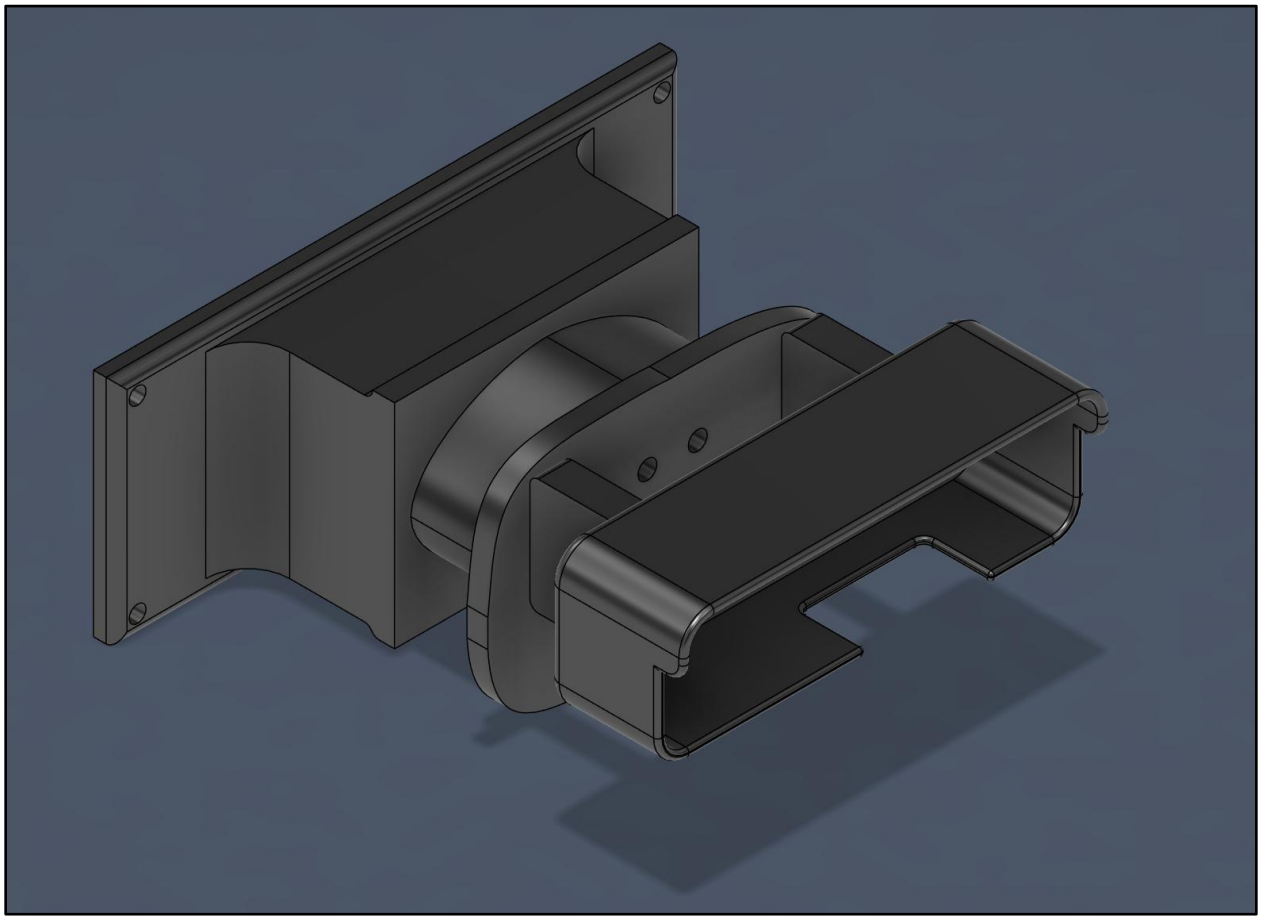

Figure 1: CAD Assembly of Front Camera Mount

<u>Components</u>

1) Front Camera Mount
2) Front Camera Cap
3) Dual Mount – Camera and PDB

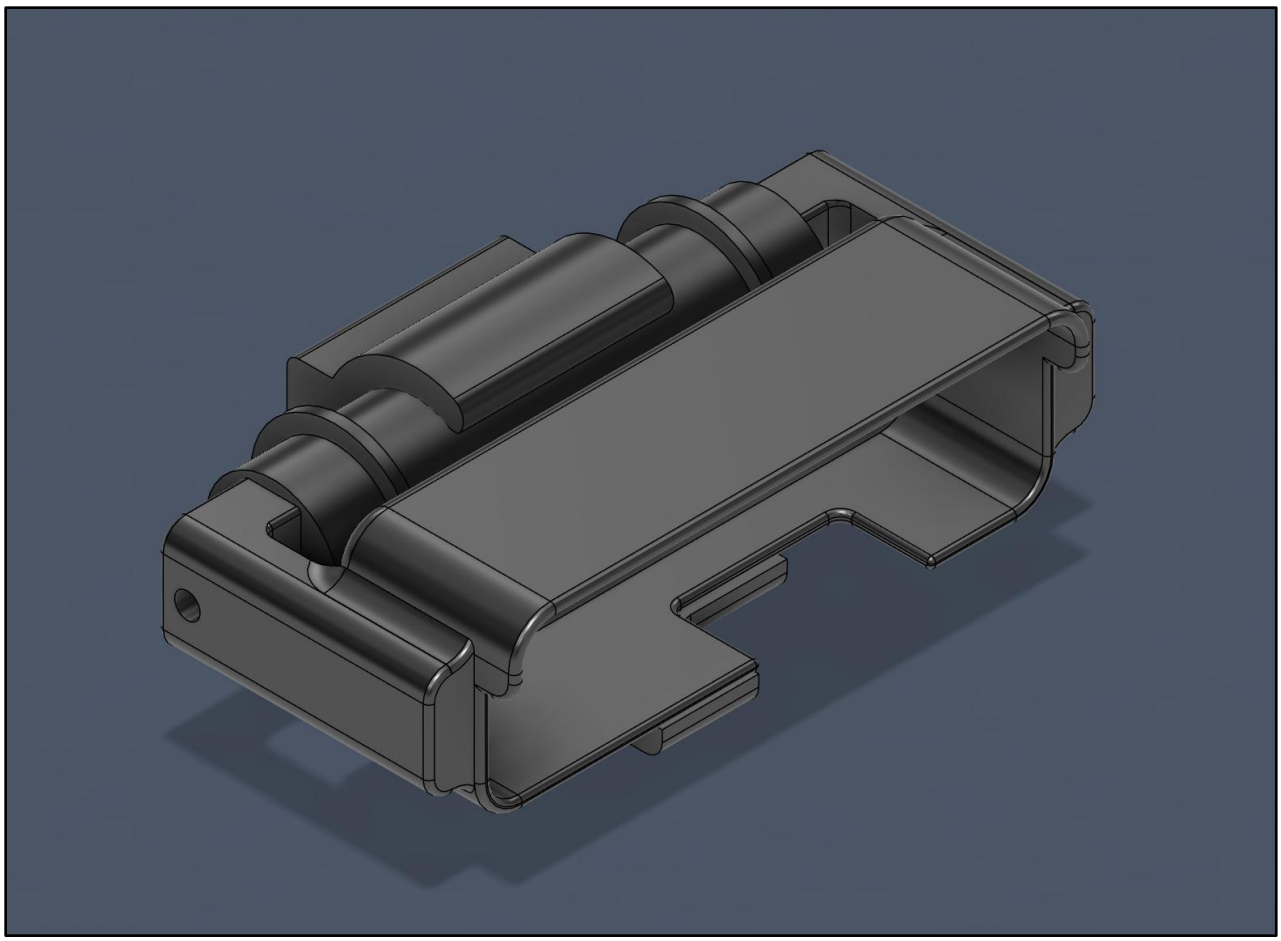

Figure 2: CAD Assembly of Rear Camera Mount (Bar Mount - Variation 1)

<u>Components</u>

1) Rear Camera Mount
2) Trunk Bar
3) Trunk Bar Support

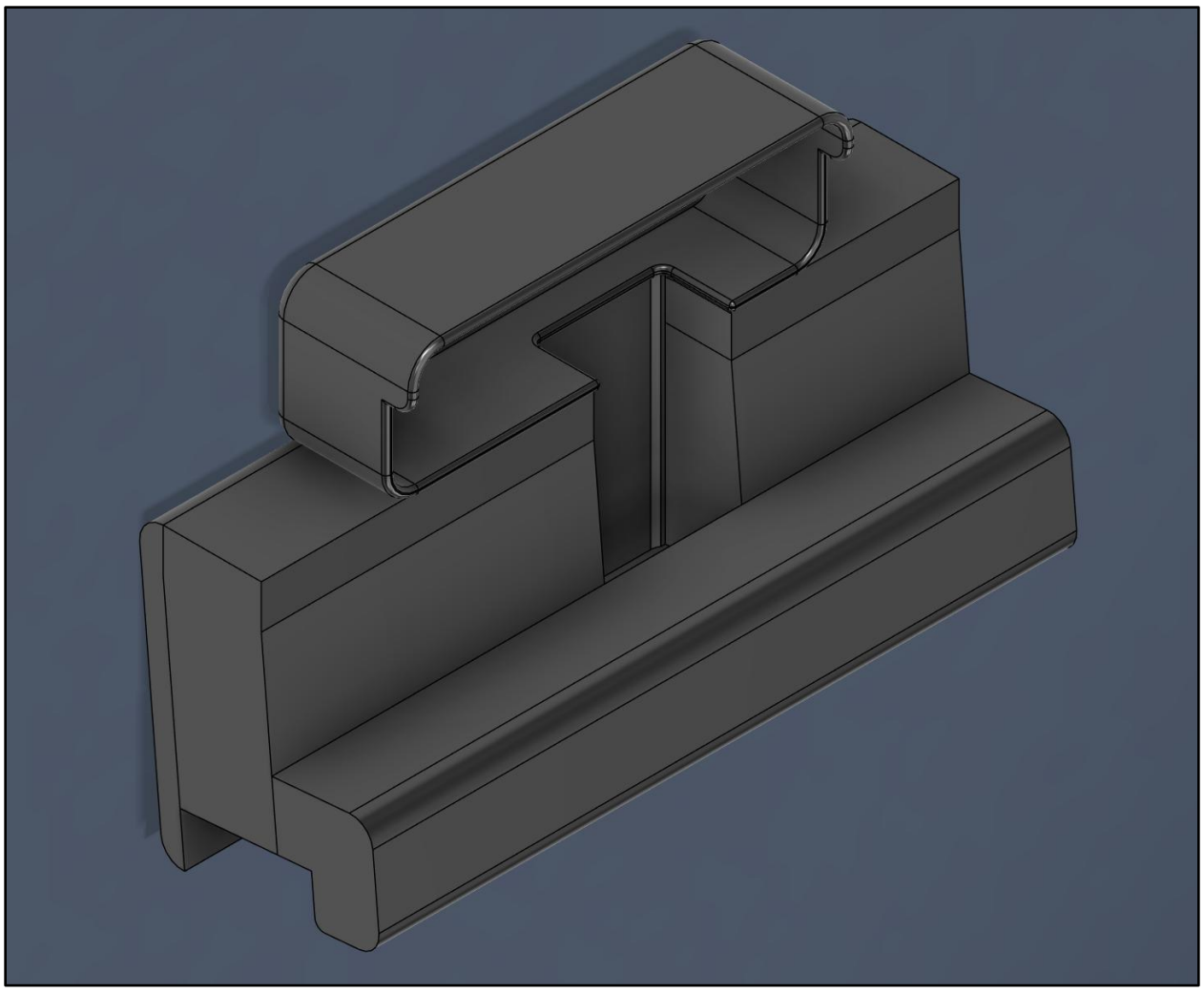

Figure 3: CAD Assembly of Rear Camera Mount (Ridge Mount - Variation 2)

<u>Components</u>

1) Ridge Mount

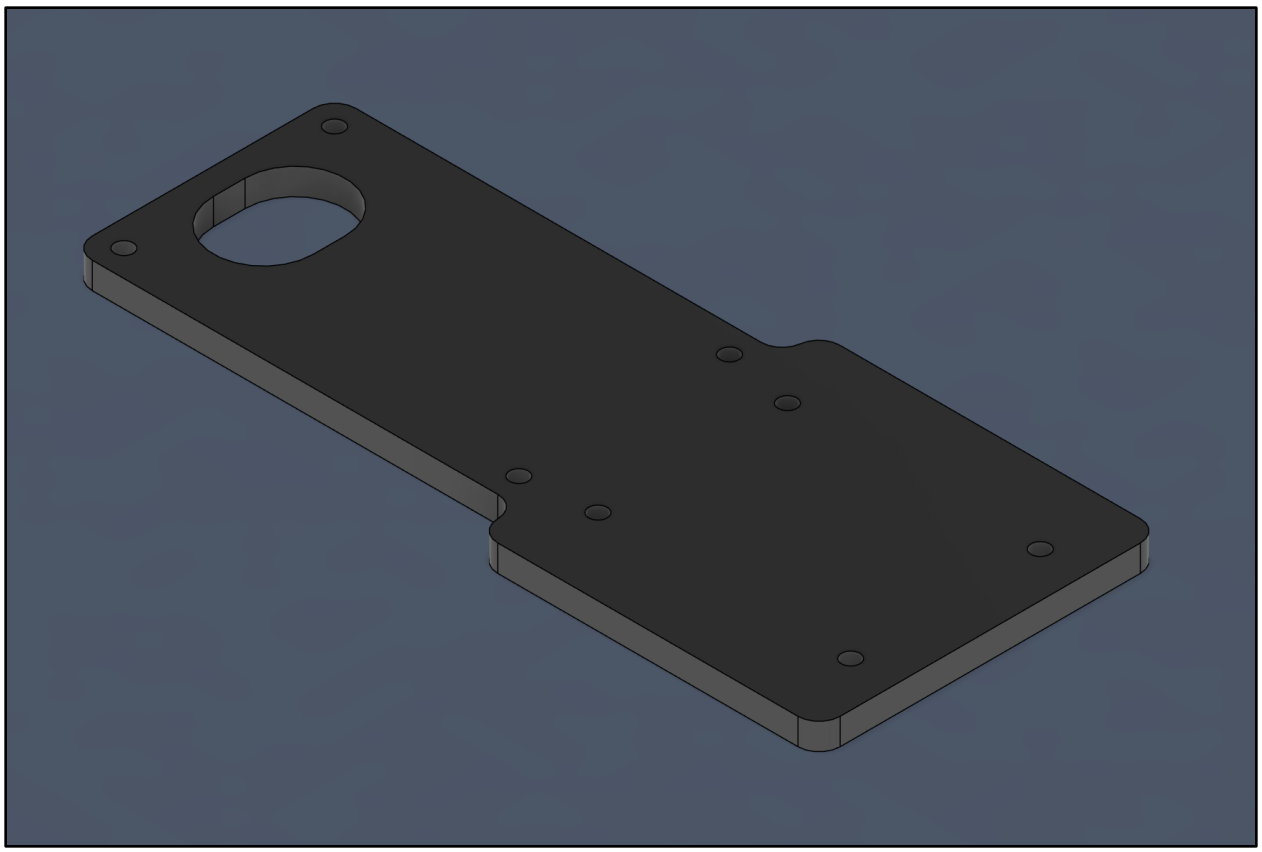

Figure 4: CAD of LiDAR Mount

<u>Components</u>

1) LiDAR Mount

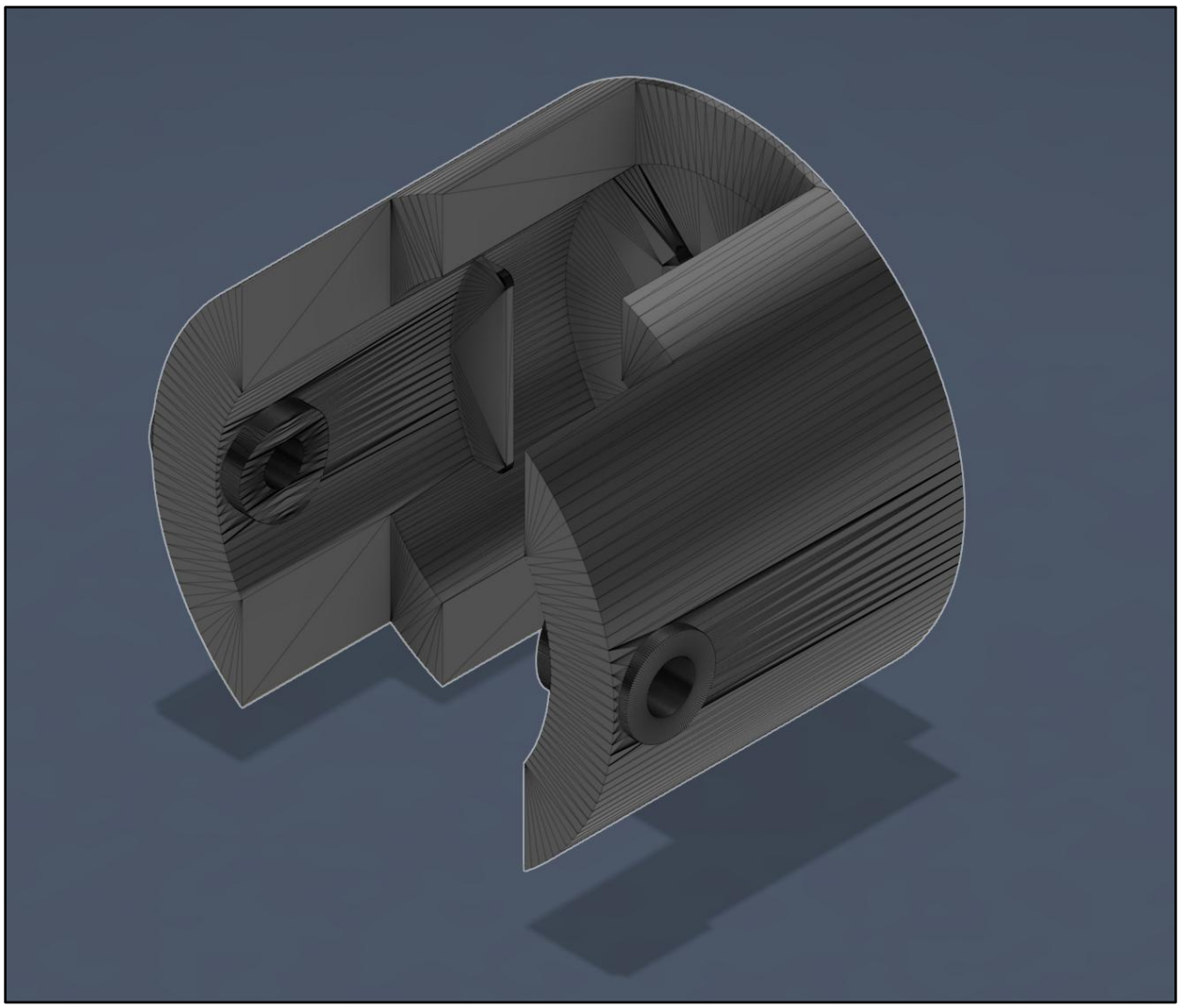

Figure 5: CAD of Encoder Mount

<u>Components</u>

1) Encoder Mount

1.2 Front Camera Mount

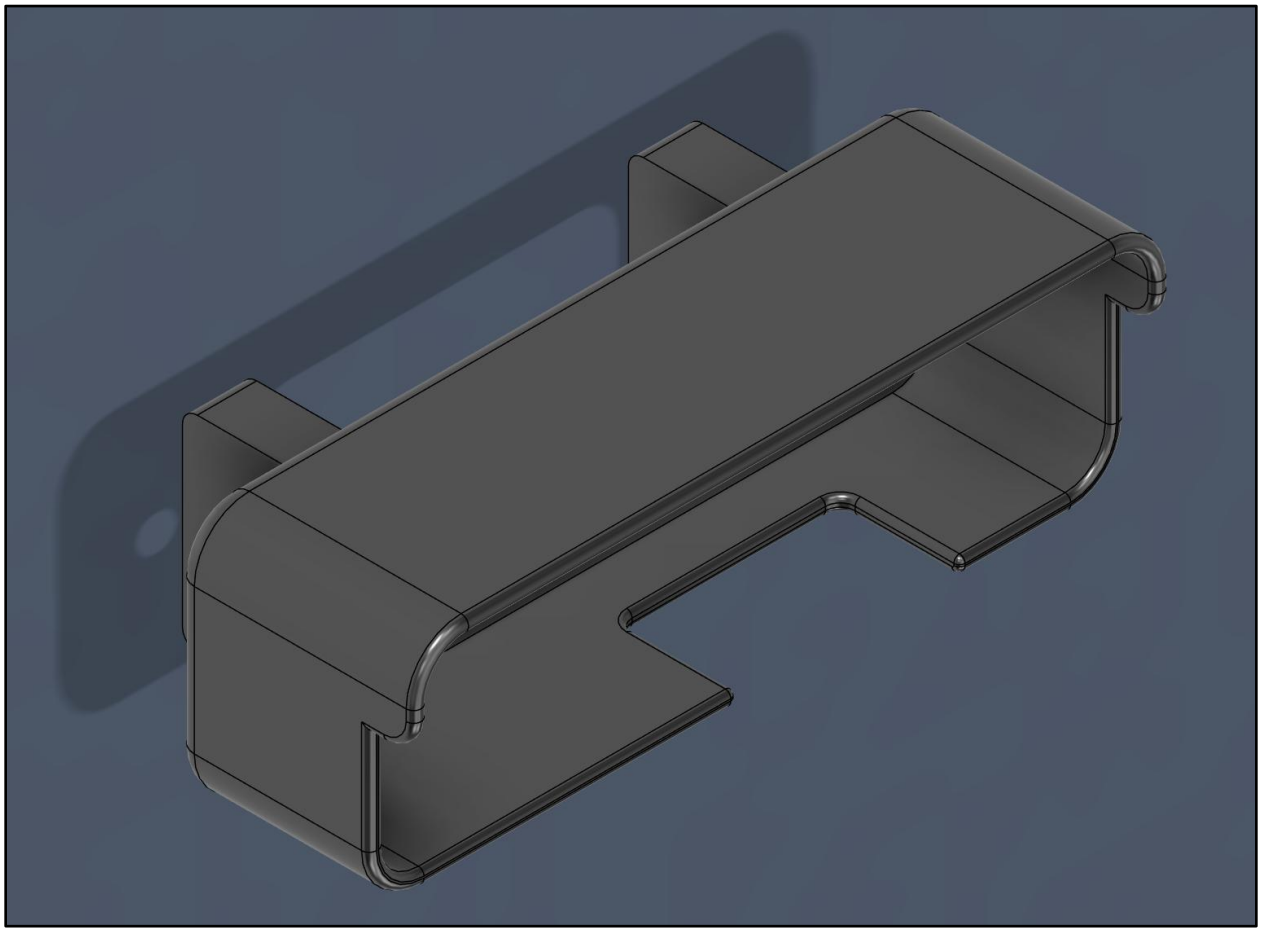

Figure 6: Front Camera Mount

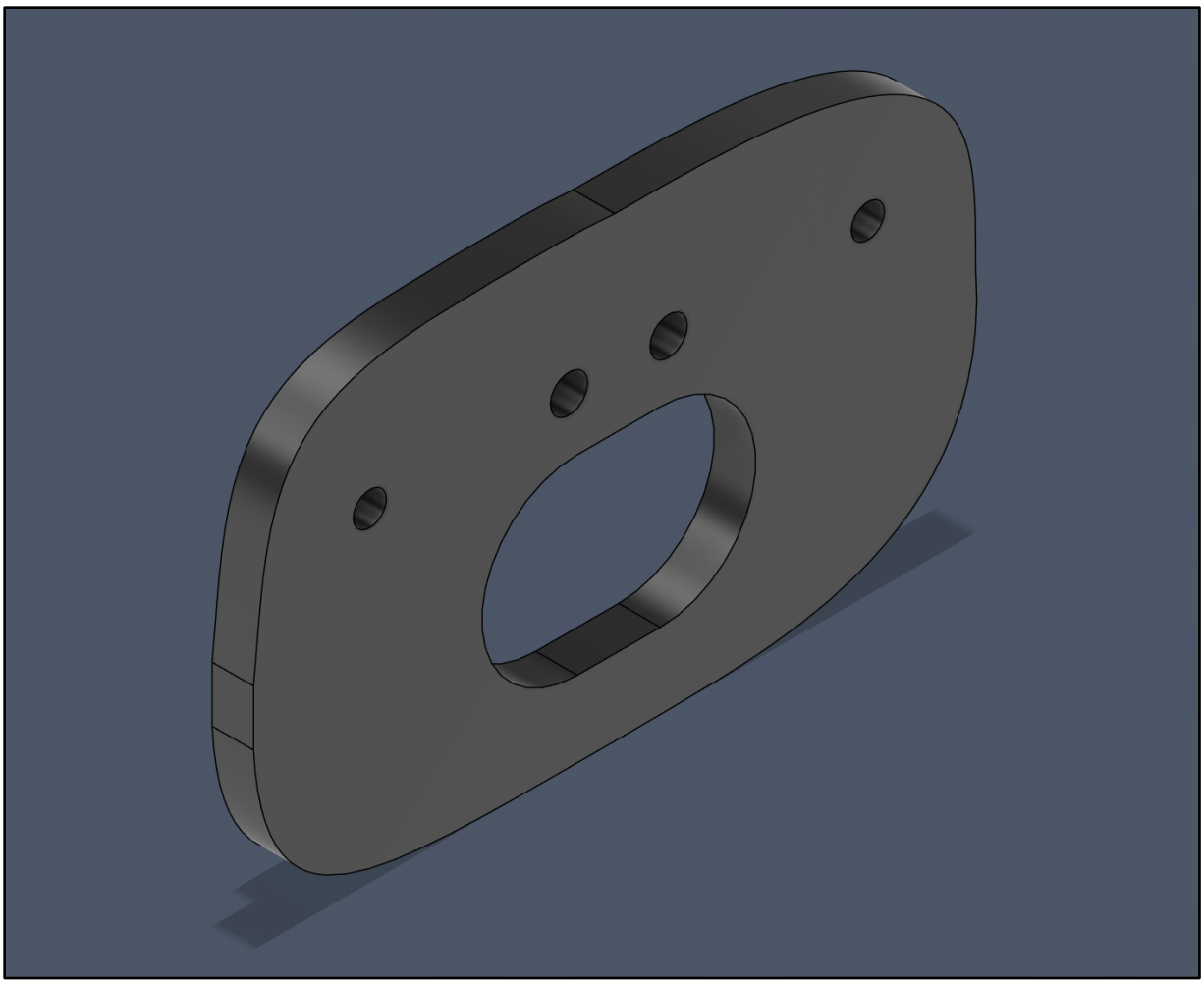

Figure 7: Front Camera Cap

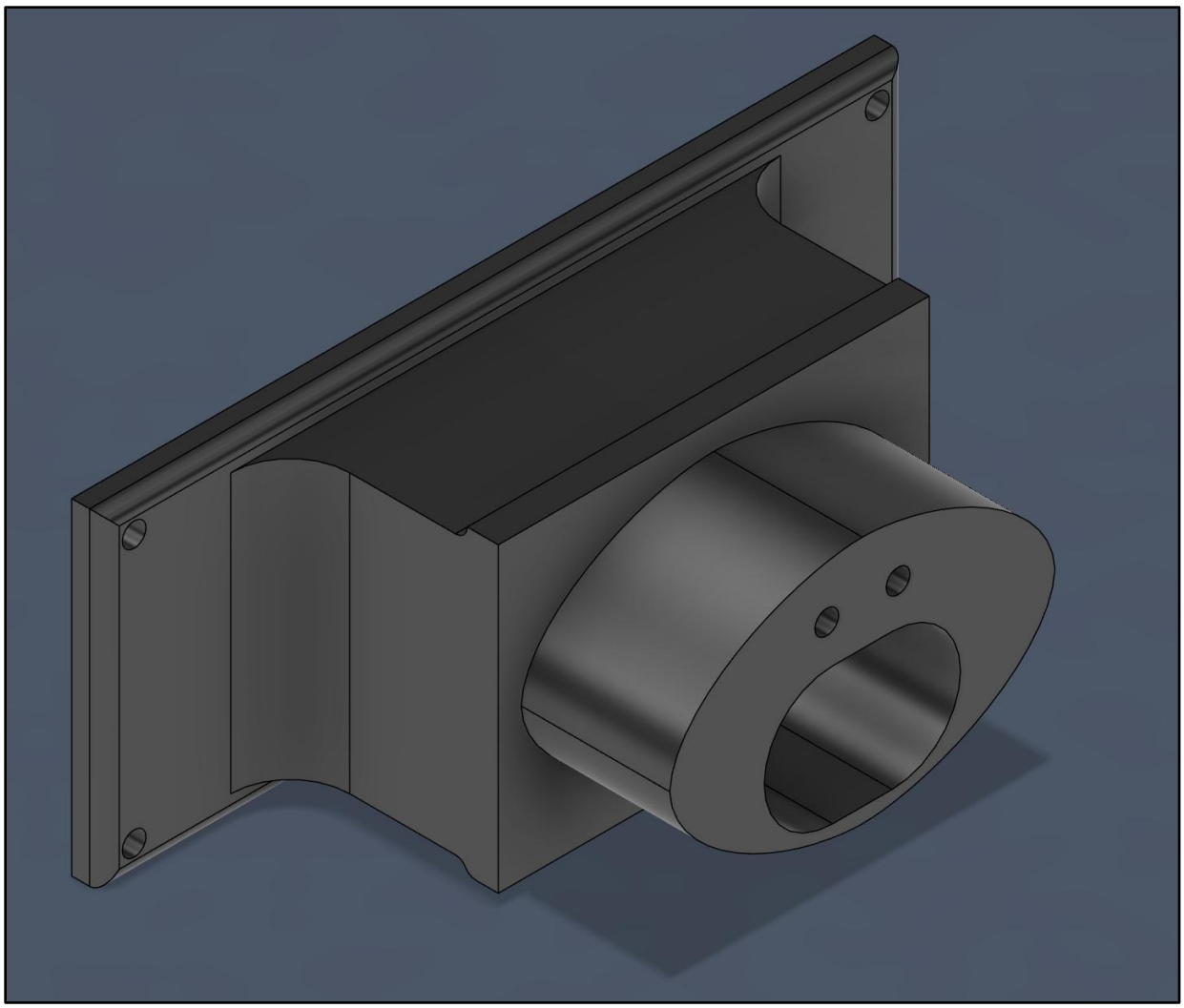

Figure 8: Dual Mount – Camera and PDB

Additional Parts

Front Camera Mount	Front Camera Cap	Dual Mount – Camera and PDB
2 x M4 Flathead Screws (Length: 25mm)	2 x M4 Screws (Length: 25mm)	4 x M4 Screws (Length: 6mm)
2 x M4 Screws (Length: 8mm)	2 x M4 Washers	

Before Installation

Note: You will need to make a hole in the front of the Jeep. In the example below, a Dremel was used to create the openings and even out the sides. In addition, the Dremel was quite unpredictable. In hindsight, a handsaw or using a device to melt the plastic (such as a soldering iron) could have been better options for achieving a cleaner, more accurate cut. If you encounter the problem of having an inaccurate hole that lines up with the Front Camera Cap, you will need to go into CAD and make a shape that will fit your hole (or edit the Front Camera Cap CAD). Ensure that the Front Camera Cap is snug to the Jeepbot. This process may take a few iterations to get right.

Front of Jeepbot before Dremel cutting

Front of Jeepbot after Dremel cutting

Installation Guide

{**Note**: Do these steps in this exact order or else there will be complications with installation}

Step 1: Find and align the Dual Mount – Camera and PDB with the PDB.

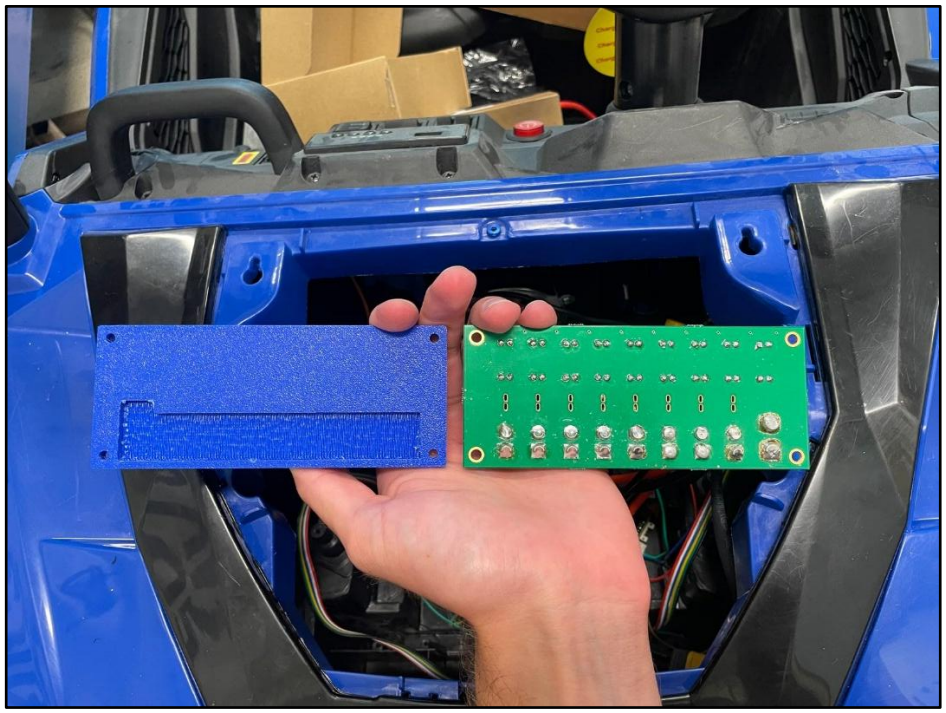

Step 2: Screw them together. [4 x M4 Screws (Length: 6mm)]

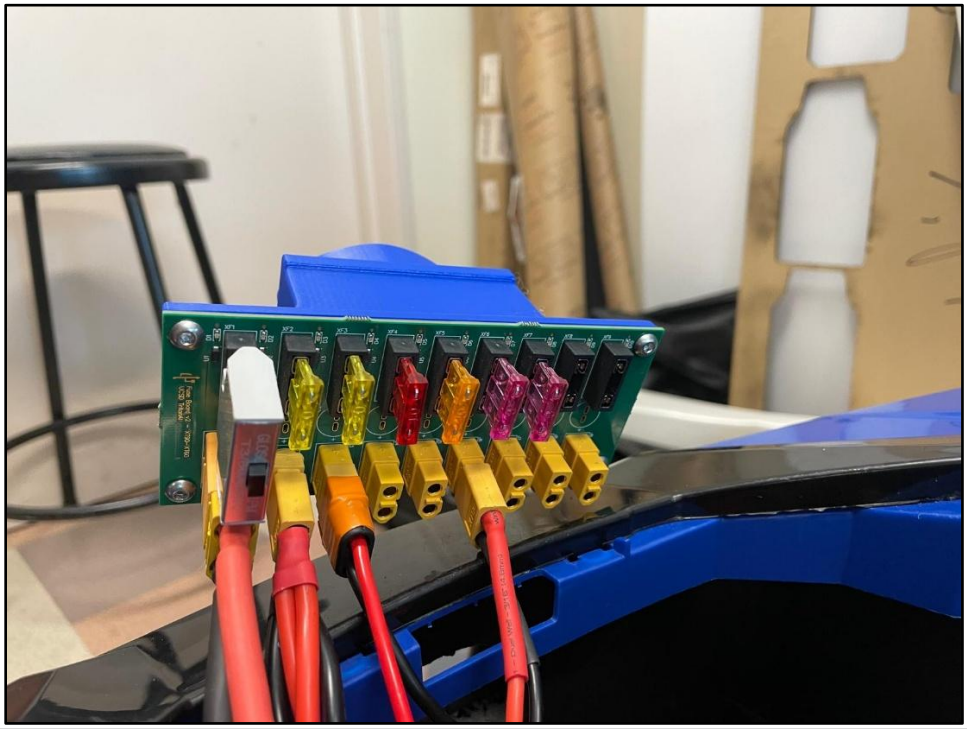

Step 3: Place the Dual Mount – Camera and PDB inside the hood so that you can see the "mouth" through the front of the Jeepbot. Next, find the Front Camera Cap and then align and screw it into the Dual Mount – Camera and PDB. [2 x M4 Screws (Length: 25mm), 2 x M4 Washers]

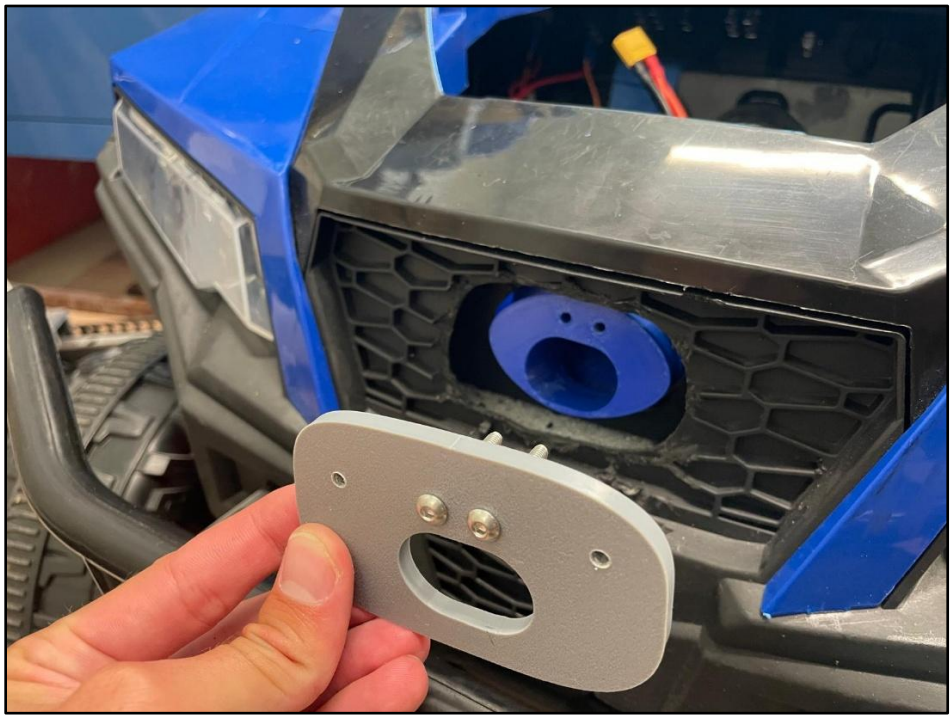

(This is what the front should look like after this step)

Step 4: Screw in the flathead screws from the inside of the Front Camera Mount into the Front Camera Cap. [2 x M4 Flathead Screws (Length: 25mm)]

Step 5: Insert the Camera into the Front Camera Mount and screw it in. [2 x M4 Screws (Length: 8mm)] {**Note**: The screws on the back will be a little difficult to access. Recommended to use a singular Hex L-Key to gain better access}

Step 6: Funnel a USB-C wire from the inside hood through the Dual Mount – Camera and PDB and Front Camera Cap and attach to the Camera. Installation complete.

1.3 Rear Camera Mounts

1.3.1 Bar Mount - Variation 1

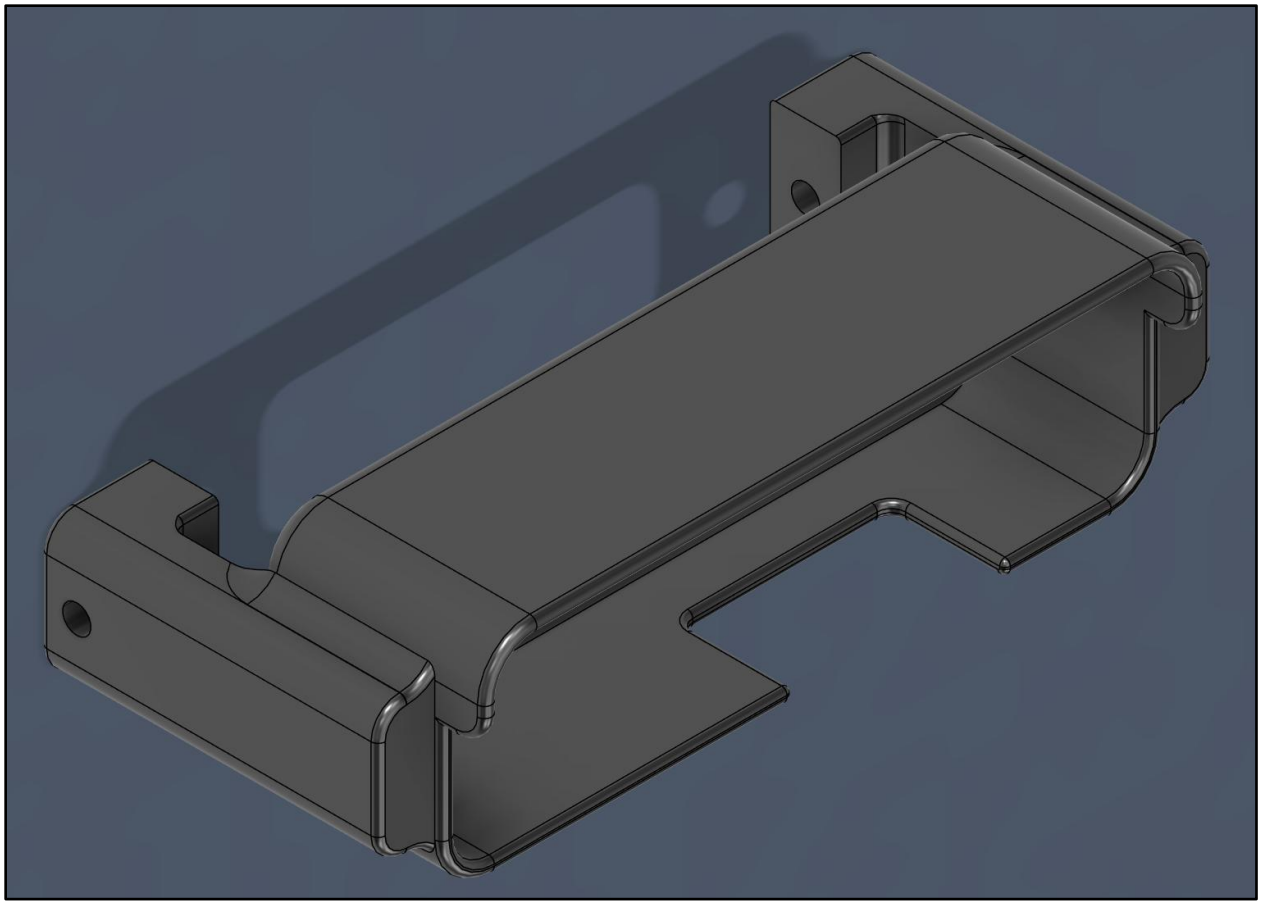

Figure 9: Rear Camera Mount

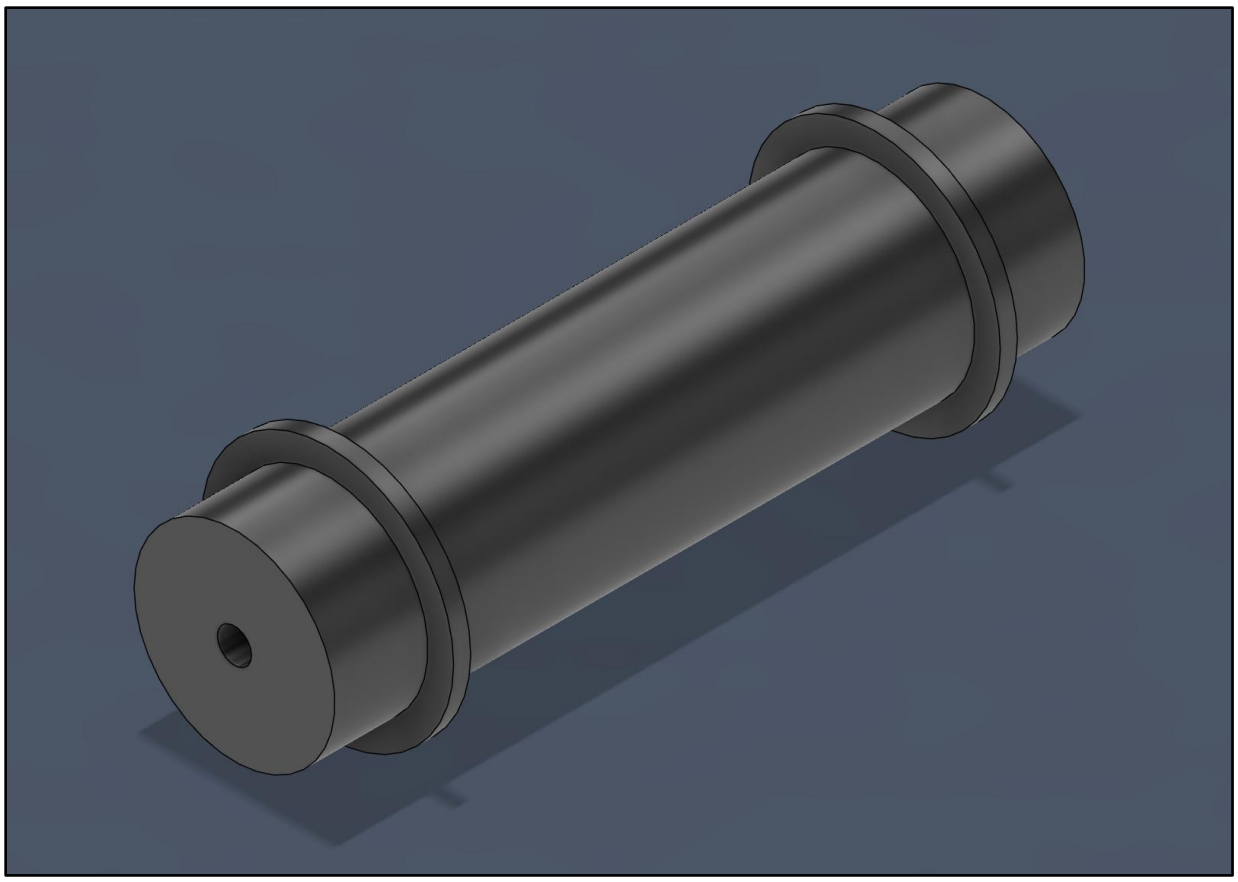

Figure 10: Trunk Bar

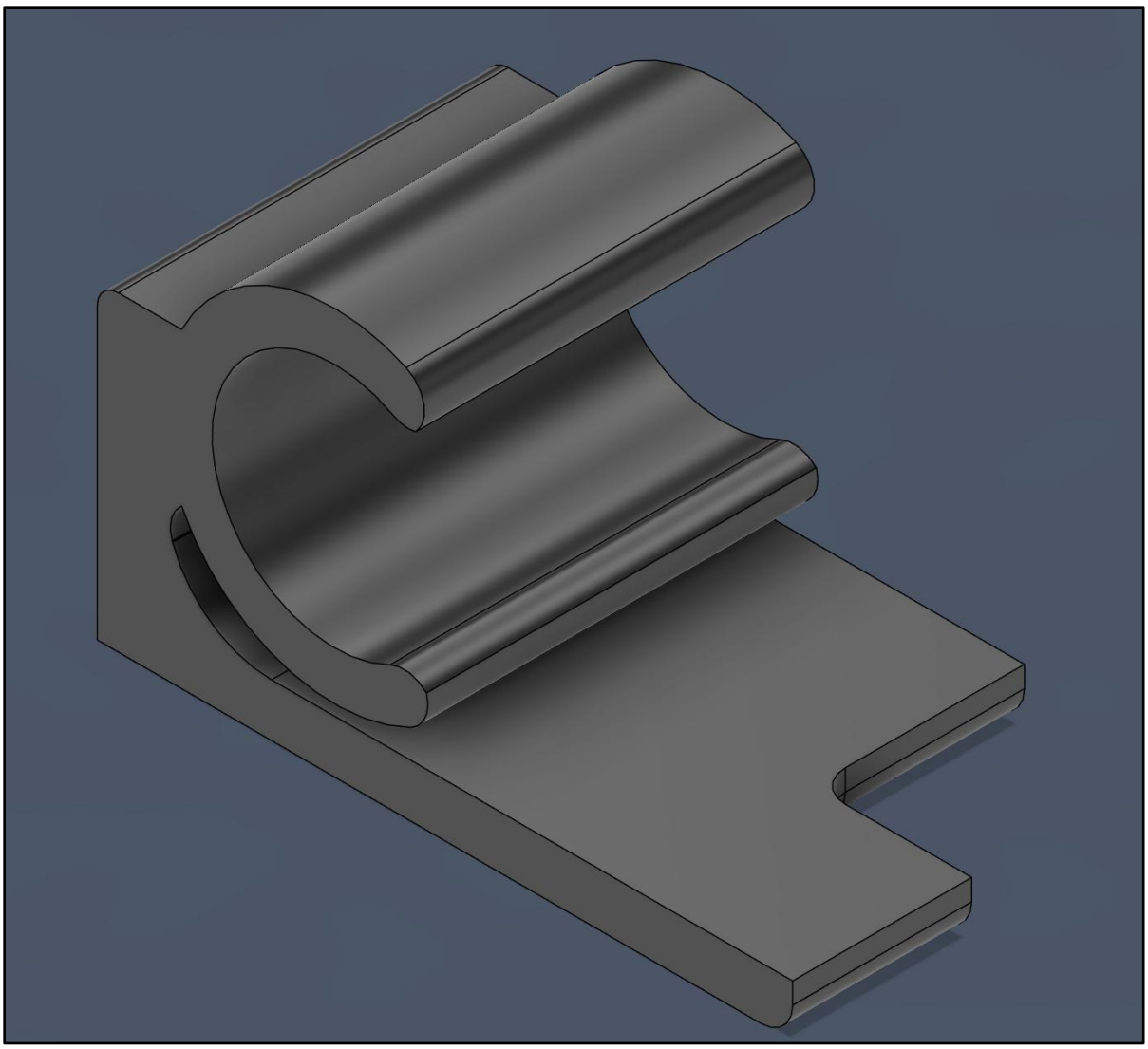

Figure 11: Trunk Bar Support

Additional Parts

Rear Camera Mount	Trunk Bar	Trunk Bar Support
2 x M4 Screws (Length: 25mm)	None	None
2 x M4 Screws (Length: 8mm)		
2 x M4 Washers		

Before Installation

Note: This mount was only made for use with the Jeepbot in open spaces without objects in view. Do not use this mount when driving indoors or near other objects, as the Camera will get damaged if the Jeepbot gets rear-ended. Recommended to use the Rear Camera Mount (Ridge Mount - Variation 2).

Installation Guide

Step 1: Place the Camera in the Rear Camera Mount and screw into place. [2 x M4 Screws (Length: 8mm)]

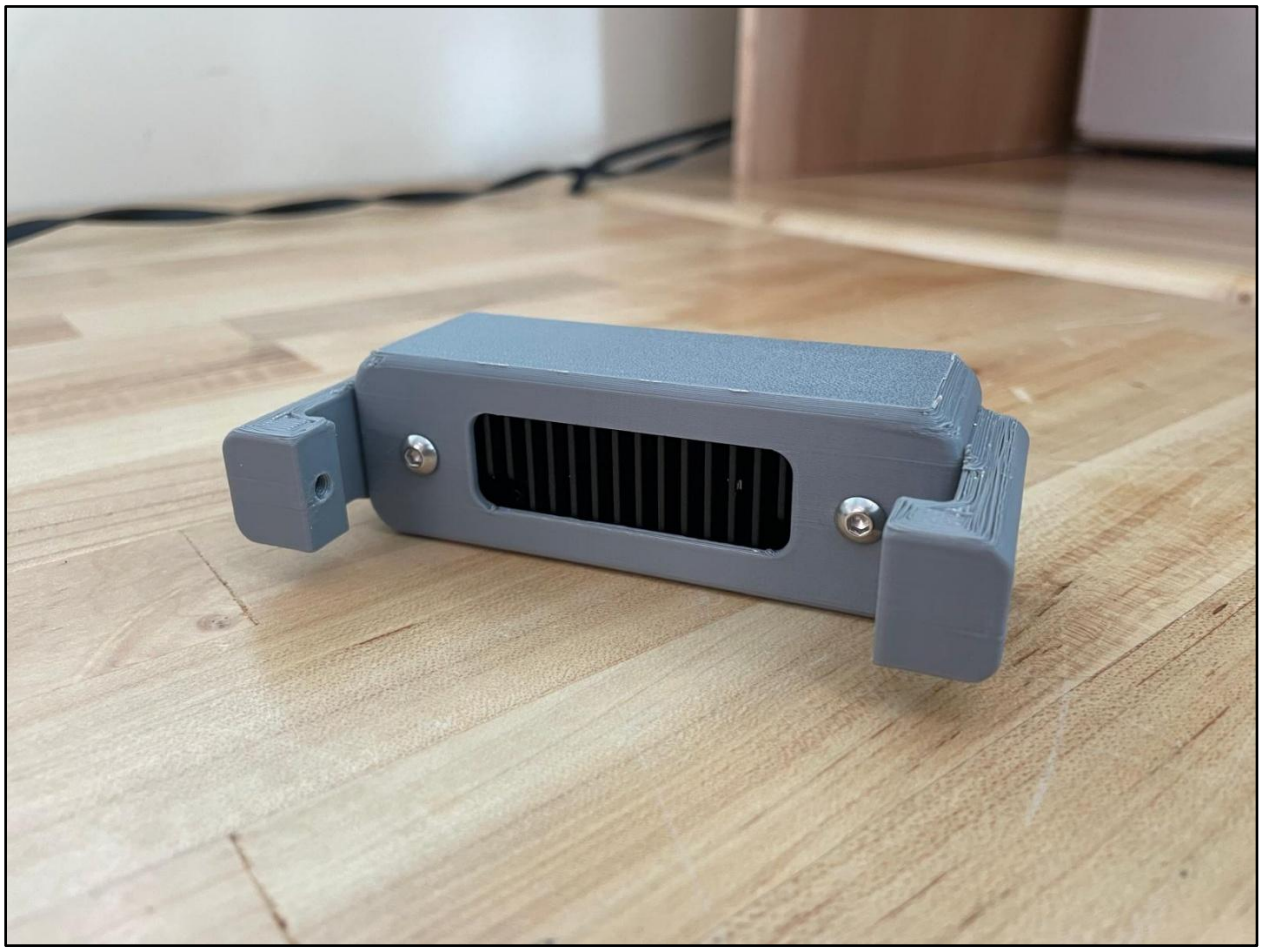

Step 2: Clamp the Trunk Bar Support onto the Trunk Bar.

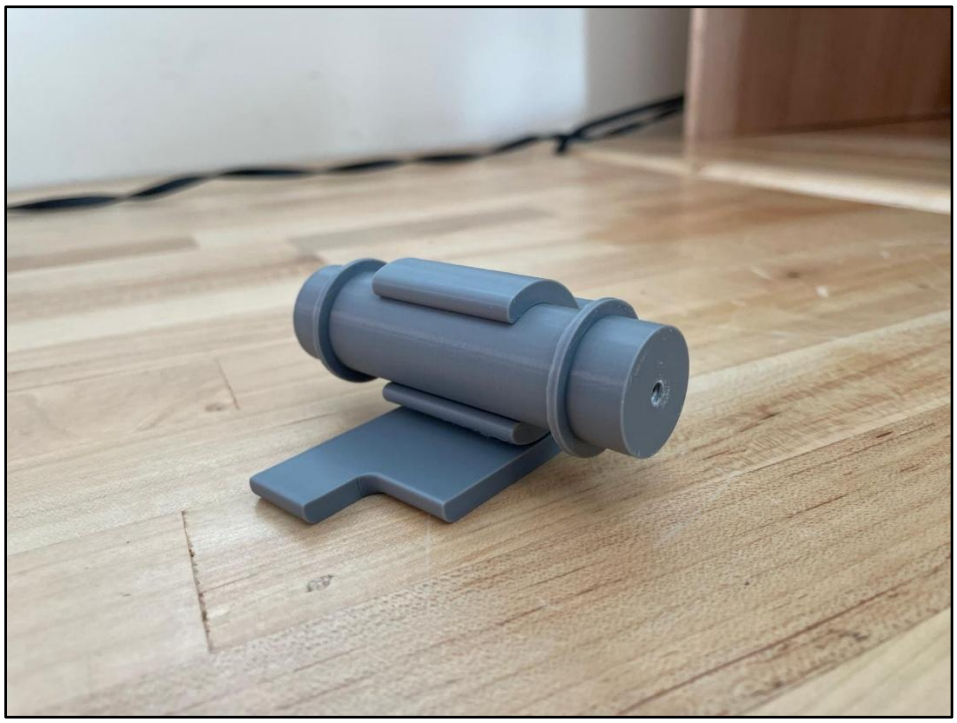

Step 3: Screw the Rear Camera Mount into the Trunk Bar from both sides. [2 x M4 Screws (Length: 25mm)]

Step 4: Insert the Bar Mount into the yellow clamps at the rear of the Jeepbot. The clamps should fit right in between the Trunk Bar Support and the Rear Camera Mount. Installation complete. {**Note**: This is a tight fit, do not be afraid to use a little force}

1.3.2 Ridge Mount - Variation 2

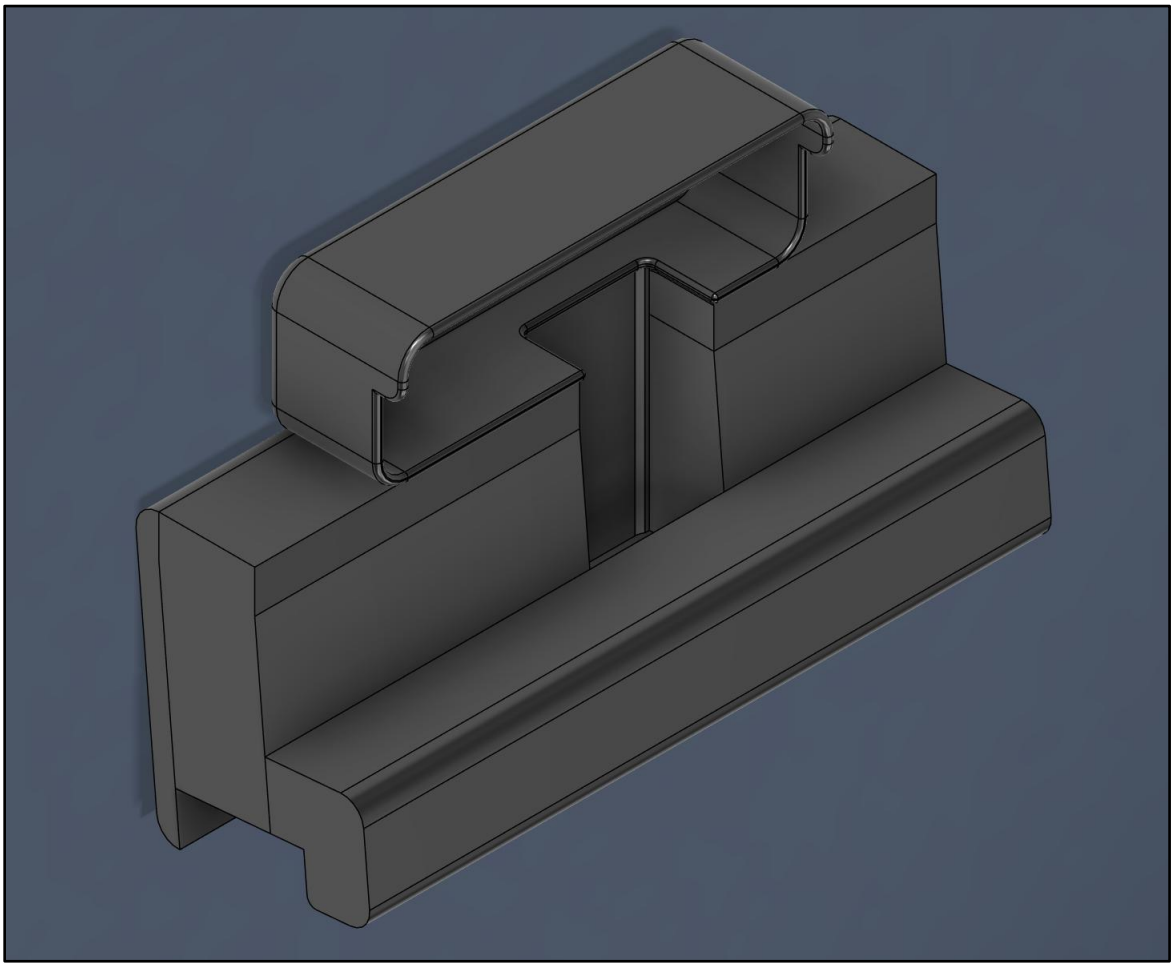

Figure 12: Ridge Mount

<u>Additional Parts</u>

Ridge Mount
2 x M4 Screws (Length: 8mm)

Installation Guide

Step 1: Screw Camera into Ridge Mount. [2 x M4 Screws (Length: 8mm)]

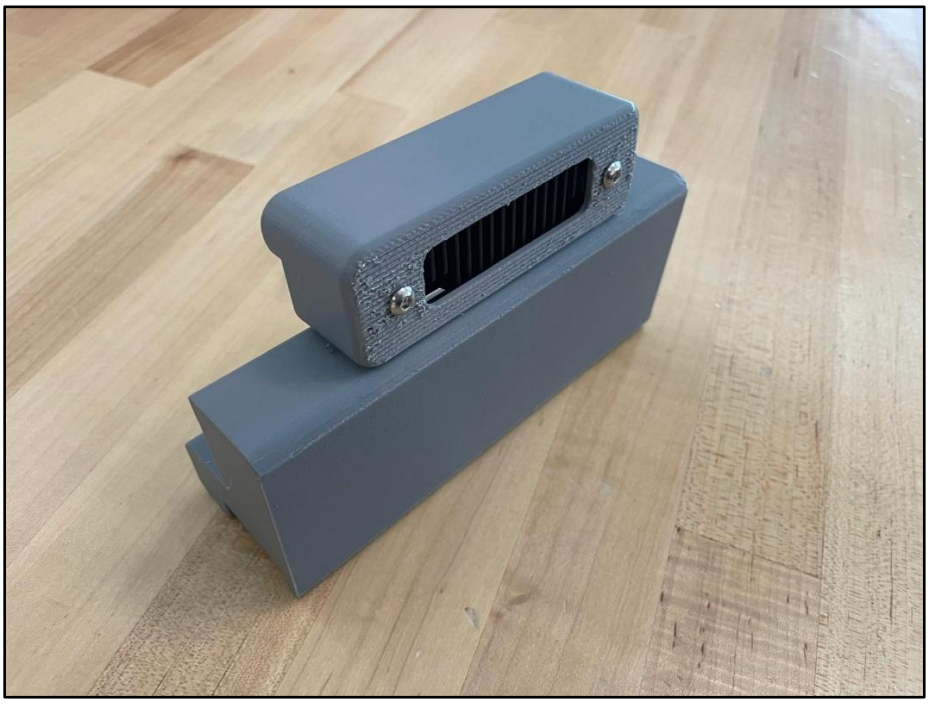

Step 2: Place Ridge Mount on the ridge of the trunk of the car. Installation complete.

1.4 LiDAR Mount

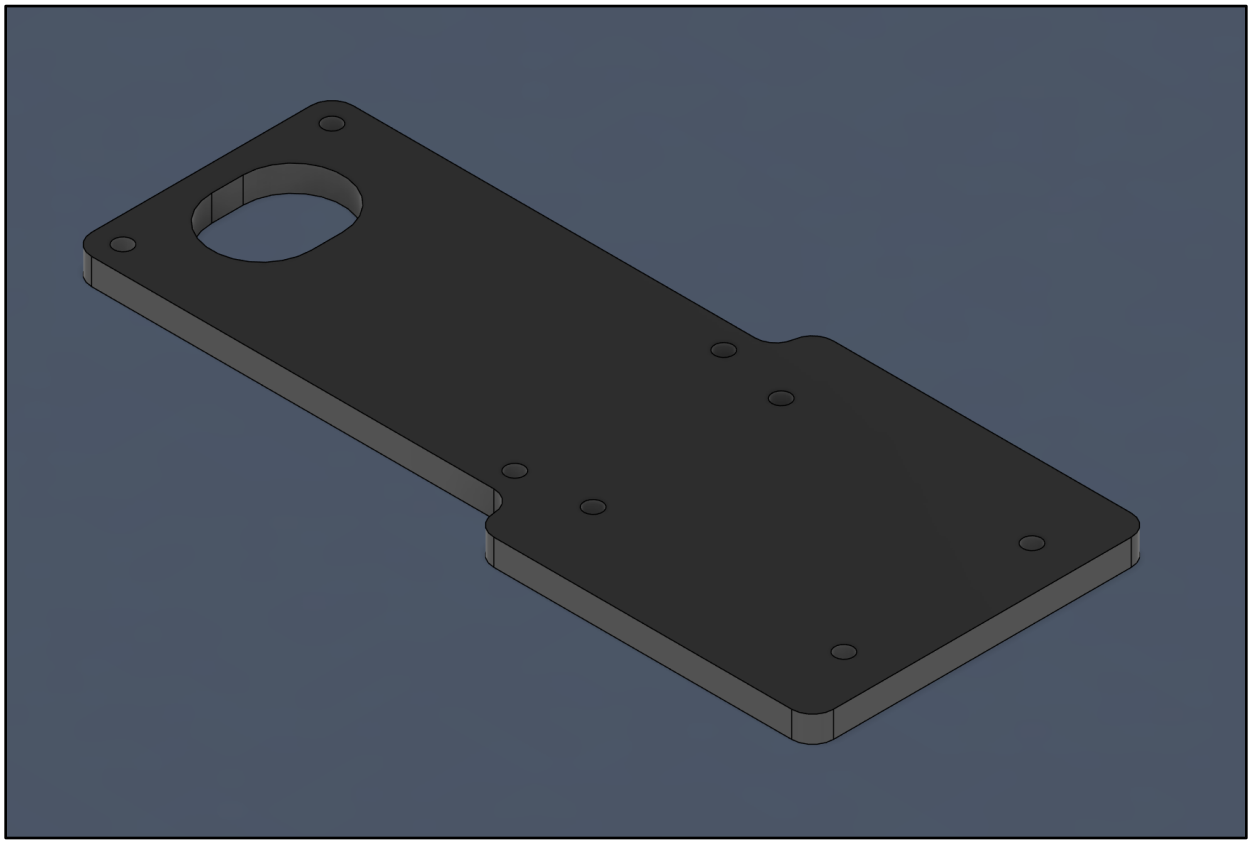

Figure 13: LiDAR Mount

<u>Additional Parts</u>

LiDAR Mount
4 x M3 Flathead Screws (Length: 6mm)
4 x M3 Screws (Length: 15mm)
4 x M3 Washers
4 x M3 Nuts

Installation Guide

Note: Please follow step-by-step instructions in order or parts may not fit.

Step 1: Create five holes in the hood of the Jeepbot. Use the LiDAR Mount as a reference as a reference for where the holes should be. Only cut out the holes in red depicted below. Recommended to use a soldering iron to create accurate holes.

Step 2: Insert LiDAR cable through hole created in the hood.

Step 3: Insert LiDAR cable through the LiDAR Mount.

Step 4: Connect the LiDAR cable to the LiDAR. Make sure there is a snug connection.

Step 5: Screw in the flathead screws to the LiDAR through the bottom of the LiDAR Mount. [4 x M3 Flathead Screws (Length: 6mm)]

Step 6: Screw LiDAR Mount into the hood. Be sure to use the nuts at the bottom to ensure secure hold. [4 x M3 Screws (Length: 15mm), 4 x M3 Washers, 4 x M3 Nuts]

Step 7: Installation complete.

1.5 Encoder Mount

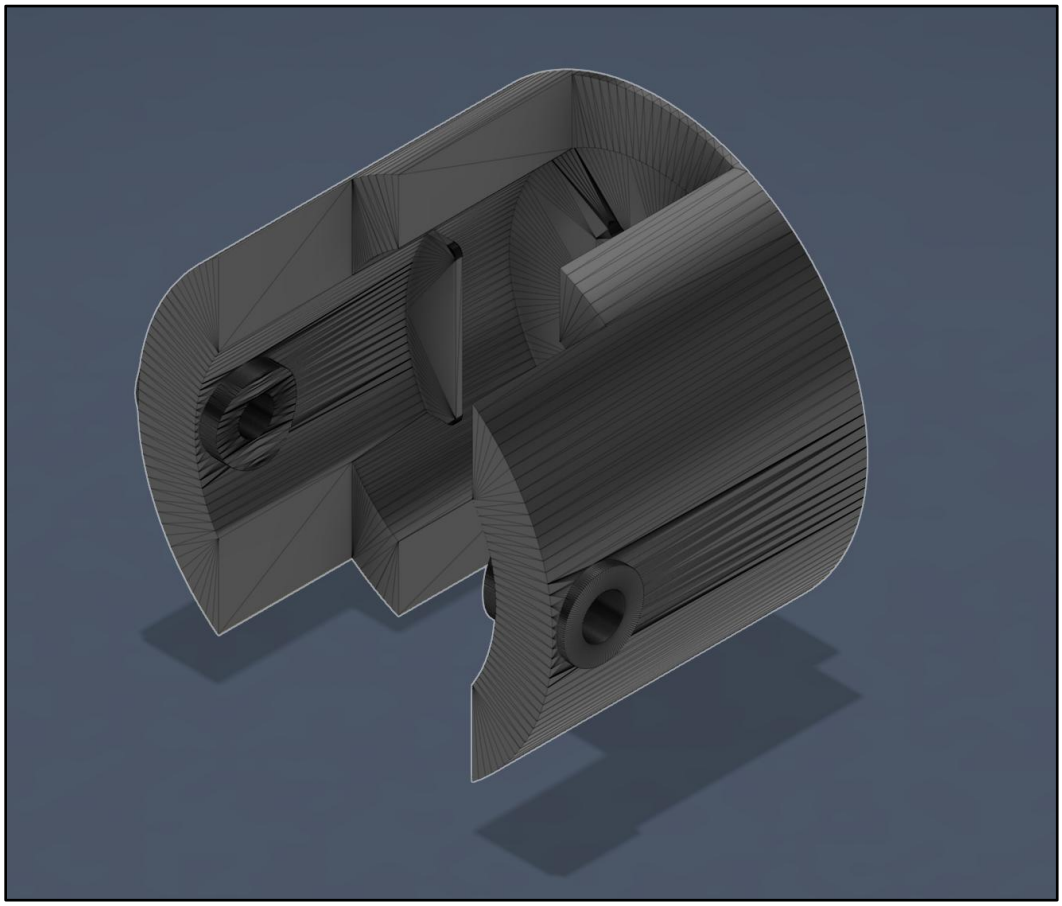

Figure 14: Encoder Mount

<u>Additional Parts</u>

Encoder Mount
8 x M5 Screws [Clamp on Motor] (Length: 25mm)
8 x M2 Screws [Secures Encoder to Mount] (Length: 25mm)

Installation Guide

Step 1: Place heat inserts for M5 screws onto both of the side encoder mount holes. Use a wide tip soldering iron at 220-240°C. {**Note**: The tip should be just wide enough to fit into the heat insert, but not wide enough to go all the way through. This will allow you to apply pressure as well as twist it left and right to sink the heat insert into the hole}

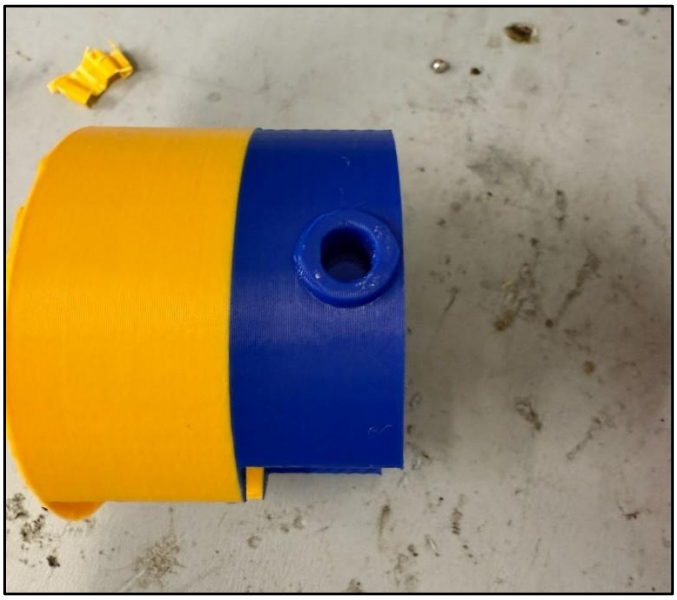

Step 2: Hold the iron perpendicular to the surface of the mount with the heat insert at the end. Apply minimal pressure as the heat insert sinks in - let the heat do the work. As mentioned prior, twist left and right so that the insert can work its way down.

Step 3: Once the top end of the heat insert is level with the mount, carefully remove the soldering iron to not take the insert out with it. Wait around five minutes for the mount to cool before inserting screws.

Step 4: Place the encoder pins down on the mount, so that your JST connectors are placed against the mount, and pins should be going through the open end of the mount. Feed M2 screws through the corners of the encoder, and through the mount. Use washers and nuts to secure it onto the mount. [8 x M2 Screws (Length: 25mm)]

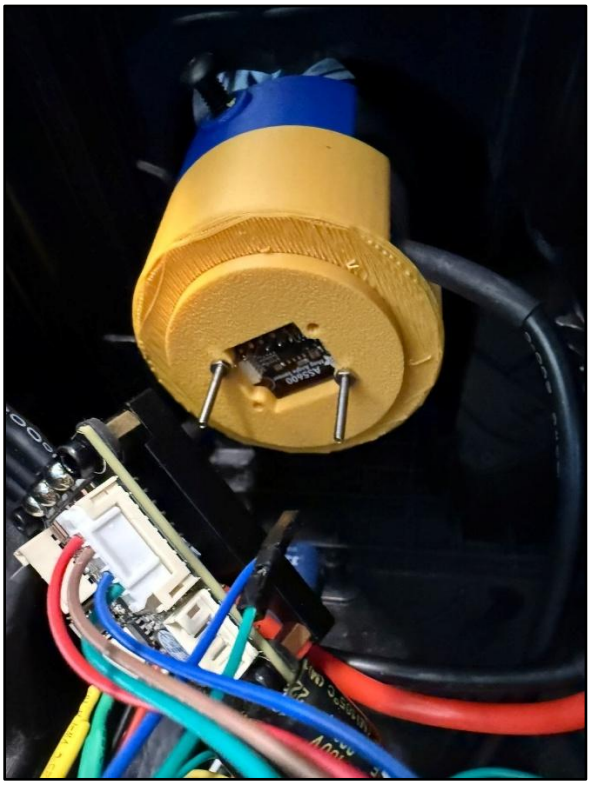
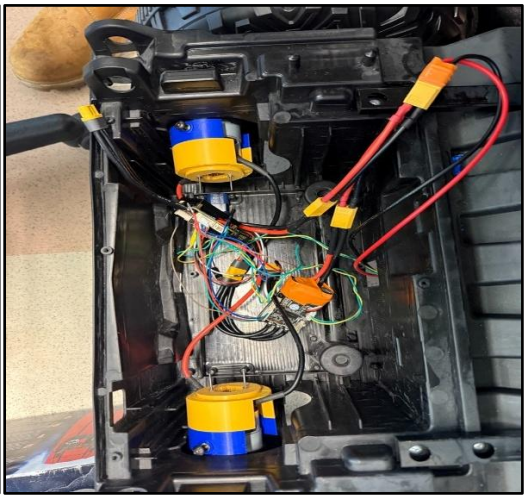
Step 5: Place the mount onto the end of the motor, fitting it around the MR60 wires. Push the mounts down until they can't be fit any further, this is when you know they've reached the plates in the center. Take the M5 screws and begin screwing the mount onto the motor, continue until secure. Installation complete. [8 x M5 Screws (Length: 25mm)] {**Note**: A slight bow inward of the mount is alright}